MAGNETIC PRODUCTS, INC.

ENGINEERED METAL CONTROL SOLUTIONS

2”Tube Drawer Magnet

Series: DMSC2

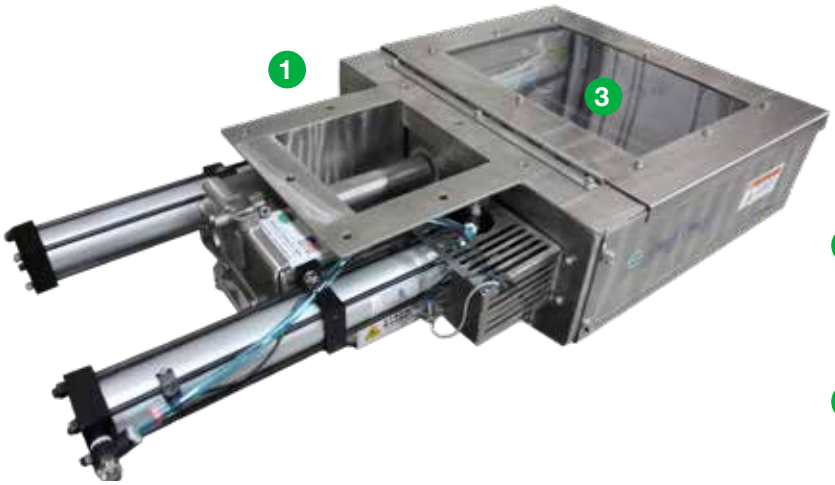

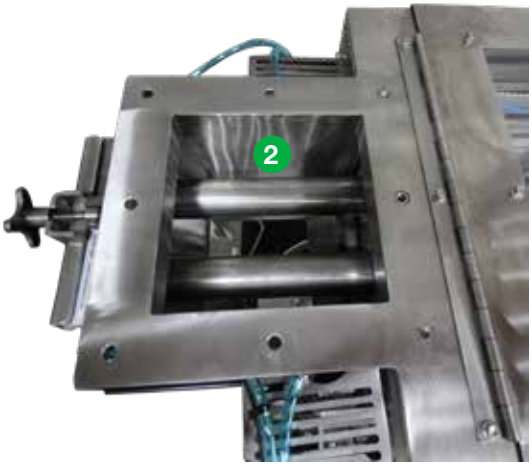

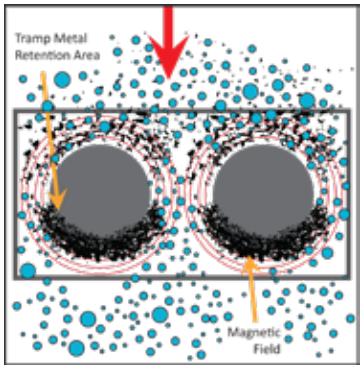

1 Intell-I-Mag® Compatible:

- Enables real-time monitoring of magnet saturation levels of the magnetic separator. This patented technology embeds sensors into the magnetic separator to measure the strength of the magnetic field. The sensors report data collected in real-time to a controller. The controller can be programmed to alert operators when the separator reaches user defined saturation levels, so they know when the magnet needs to be cleaned, or just as important when it doesn't.

2 2” Diameter Magnetic Tubes:

- High-performance 2” diameter rare earth magnetic tubes are configured on 4” centers to achieve the optimal balance for powerful magnetic separation and product flow.

3 Cleaning Cycle:

- Start: After manually or electrically actuating the solenoid, the cylinders retract, pulling the magnetic tubes through the stripper assembly to deposit the collected tramp iron outside of the product flow area.
- Finish: The cylinders return to the run position, pushing the magnetic tubes back through the stripper assembly into the housing (working position).

Optional Product Flow Diverters:

- Installed at the housing inlet, in between each tube, optional product flow diverters are designed to slow the product flow and increase magnet on time for capturing weakly magnetic materials, such as, work-hardened stainless steel.

Floating Stripper Seal:

- Adjusts to tube resulting in even wear and longer life between replacements.
- Held in place by machined and fastened laminated stripper plate assembly.

Stripper Latch:

- Releases stripper plate assembly once it has been clearly pulled away from the sealing plate.
- Prevents accidental cleaning of the tubes in the product flow area, commonly caused when the stripper assembly is stuck to the sealing plate.

Sani-TIGHT Seal™ Gasket:

- Type: Compression style “O-ring” cord gasket.
- Sealing plate: ½” thick machined stainless plate.
- 100% Positive seal, cannot be over-compressed.
- Sanitary: Gasket can be removed and replaced for wash-down, no adhesive required.

Continuous Automated Self-Cleaning Model:

- For high level tramp metal or weakly magnetic tramp metal applications, this system continuously cleans on the go without stopping production.

**Specifications subject to change*

MPI | 683 Town Center Drive, Highland, MI 48356
1.248.887.5600 | info@mpimagnet.com | www.mpimagnet.com

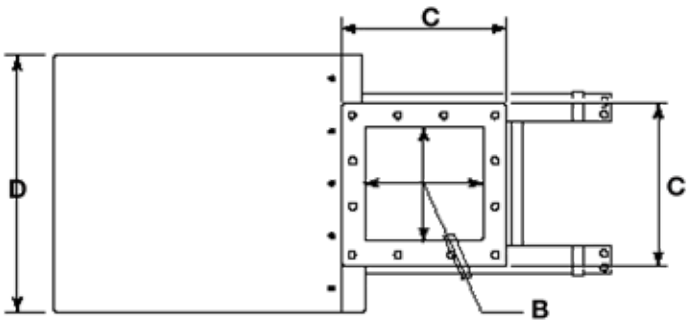

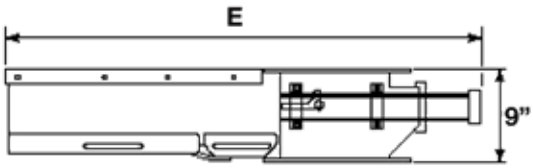

DMSC2 Selection Guide

MODEL NUMBER	DMU'S FLOW OPENING AREA "B"		FLANGE WIDTH "C"		OVERALL WIDTH "D"		OVERALL LENGTH "E"		APPROX. UNIT'S WEIGHT		FLOW RATE	NO. OF TUBES
	SQ IN	SQ CM	IN	CM	IN	CM	IN	CM	LBS	KGS	FT³/HR	NUMBER
DMSC2-08	8 x 8	20 x 20	12.25	31	22.75	58	43	109	170	77	600	2
DMSC2-12	12 x 12	31 x 31	16.25	41	26.75	68	47	120	190	86	2,400	3
DMSC2-16	16 x 16	41 x 41	20.25	51	30.75	78	51	130	230	104	3,750	4
DMSC2-20	20 x 20	51 x 51	24.25	61	34.75	88	55	140	300	136	6,337	5
DMSC2-24	24 x 24	61 x 61	28.25	71	38.75	98	59	150	330	149	9,600	6

Custom sizes available upon request.

DMSC2 Selectable Options

Intelligence with Intell-I-Mag®:
- Intell-I-Mag® ready (upgradable)
- Intell-I-Mag® Included

Cleaning Method:
- **Automated self-cleaning (standard)**
- Continuous automated self-cleaning

Number of Tiers of Tubes:
- **100 Series with 1 tier of tubes (standard)**
- 200 Series with 2 tiers of tubes

Magnetic Tubes [reference datasheet MT]:
- Hi-G high-performance Rare Earth

Diverters: Diverters slow the product down through the separator and direct product onto the magnetic tubes for increased separation efficiency.
- **Included (standard)**
- Not Included (optional for products that bridge and choke)

Maximum Operating Temperature: 221 F
Maximum Particle Size: 1/2”
Maximum Target Tramp Metal Size: 1”

Stripper Material:
- **UHMW material (standard) Maximum temperature: 180°F (82°C)**
- Hydex material with high wear resistance and temperature, maximum temperature: 221°F (105°C)
- Metal & x-ray detectable Hydex material with high wear resistance and temperature, maximum temperature: 221°F (105°C), color: blue

Self-Clean Package:
- **(2) Pneumatic cylinders prepped for reed switches – 80 PSI input. (standard)**
- (2) hydraulic cylinders

**Specifications subject to change*

MPI | 683 Town Center Drive, Highland, MI 48356
1.248.887.5600 | info@mpimagnet.com | www.mpimagnet.com

Reed Switches: For position verification of cylinders in open and closed position.

- **Not included (standard)**
- Quantity 1 bolt-on magnetic reed switch for unit closed confirmation (120VAC/VDC 500MA)
- Quantity 2 bolt-on magnetic reed switches for unit open and closed confirmation (120VAC/VDC 500MA)

Valve Package:

- **120VAC explosion proof rated (standard)**
- 240VAC explosion-proof rated
- 12VDC explosion-proof rated
- 24VDC explosion-proof rated
- A manual lever to actuate magnet cycle

Transitions: Stainless steel transitions for easy installation.

- **Not included (standard)**
- Inlet, outlet or both, configured as required for installation

Safety Cage Design:

- **Safety cage with removable cover for magnet access (standard)**
- Safety cage with hinged cover for easy magnet access
- Safety cage with hinged cover, Lexan viewing window, and DESTACO latches for easy magnet access and visual drawer position monitoring

Tramp Metal Collection Method:

- **Open bottom safety cage with MPI standard flange (standard)**
- Removeable collection tray (split tray for sizes 16” and larger)
- Bolt on tramp iron collection transition to 4” pipe with sock bead to attach collection pipe or bag

Rack and Pinion System: Large drawers, adhesive and abrasive products can benefit from the added alignment provided by the rack and pinion system. The RP system provides smooth and jam-free cleaning of the magnetic tubes ensuring that all magnet tubes travel the exact same distance, at the same time, from left to right, top to bottom, resulting in reduced system wear and improved magnetic tube cleaning.

- **Not included (standard)**
- Included

Internal Drawer Support: Provides drawer support when cycling and mechanically fastens tubes together.

- Not included (standard on sizes 16” and smaller)
- Included (standard on all sizes 18” and larger)

Material Construction:

- **304 Stainless Steel (standard)**
- 316 Stainless Steel

Magnetic Material Temperature:

- **176° F (80°C) @ 52+ MGOe (rare earth) (standard)**

Tube Coatings:

- **Stainless steel with no coating (standard)**
- Synergistic Coating

Gasket Material:

- **White silicone, FDA approved (standard)**
- Buna, FDA approved
- Metal detectable blue silicone, FDA approved

Companion Flanges: Matching companion flanges for customer to weld onto existing chute work for easy installation.

- **Not included (standard)**
- Stainless steel companion flanges
- Carbon steel companion flanges

**Specifications subject to change*

MPI | 683 Town Center Drive, Highland, MI 48356
1.248.887.5600 | info@mpimagnet.com | www.mpimagnet.com